Lab 4: Keypad Encoder

Today, we are going to use our knowledge of sequential and concurrent logic to implement a driver for a 4x4 keypad. Additionally, we will see how to create a testbench to verify our designs in simulation more easily.

Discussion – Lab 3

1. Any issues?

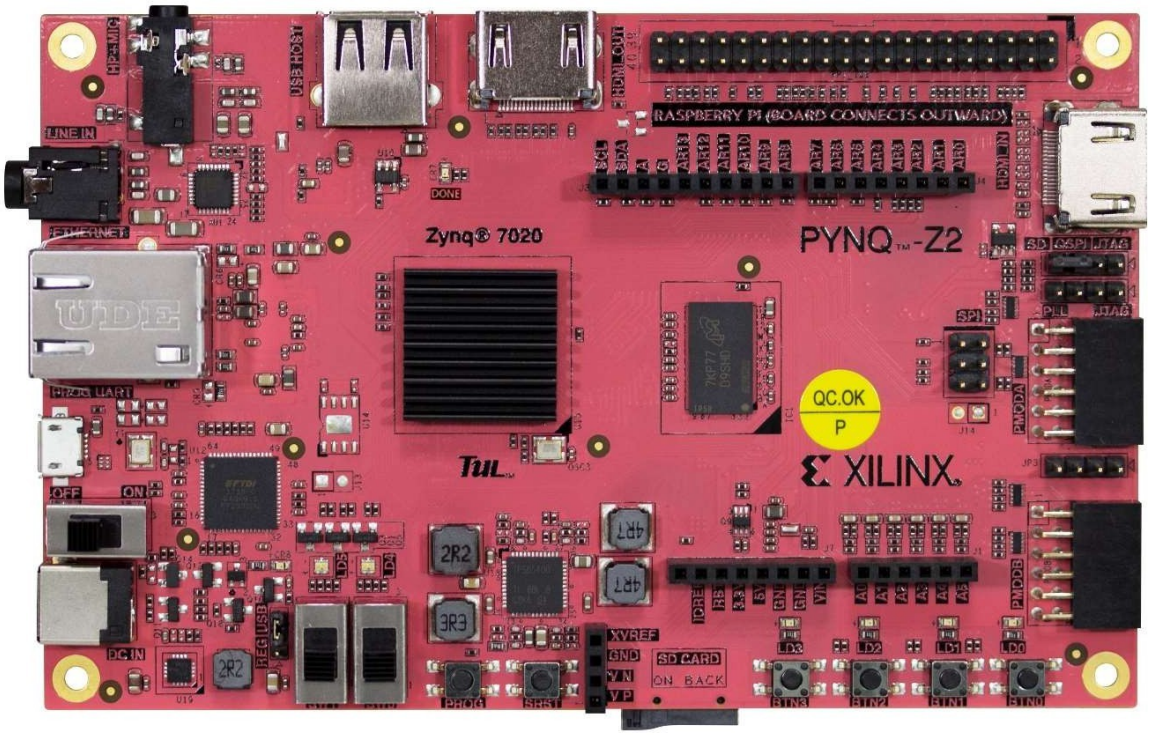

Demonstration – FPGA Design Flow

1. The PYNQ board
2. PYNQ Z2 board files
3. Select target board in Vivado
4. A simple circuit for FPGA implementation
5. Constraints
6. Synthesis, implementation, bitstream generation, coffee break
7. Post synthesis- and post implementation simulation

Demonstration –Testbenches in Logic Circuit Design

1. What is a testbench?
2. Testbench design for example

Task 1 – PWM block

1. Create a *pwm_block* in Vivado (figure 1)
2. Make the counter number of bits n_bits generic
3. Test and verify in simulation

Figure 1: PWM block diagram

Task 2 – Keypad Encoder

1. Think about which VHDL entities are required to make a 4x4 keypad driver. Hint: It can be built almost exclusively from your previous designs.
    a. Maybe you will need to build a Lookup Table for mapping the output of the keypad encoder to the actual number displayed on the keypad
2. Import the required *.hdl* files. Make a new block design *keypad_encoder.bd*. Implement the keypad in block design, see figure 2.
3. Create a testbench using the VHDL entity *pad_mod_behav.vhd*, see figure 3
4. Test and verify you design in simulation using your testbench

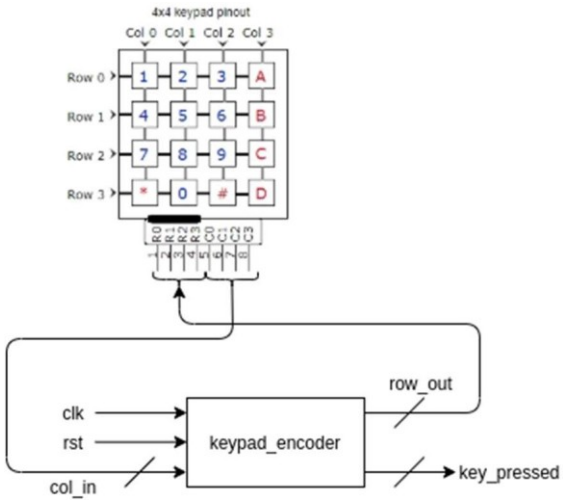

Figure 2: Keypad and keypad encoder block diagram

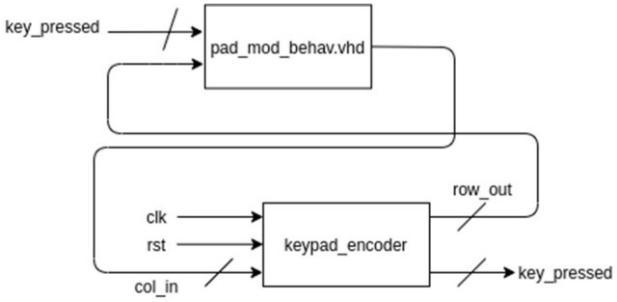

Figure 3: Keypad encoder and testbench